GCOOS System Overview

GULF OF MEXICO COASTAL OCEAN OBSERVING SYSTEM

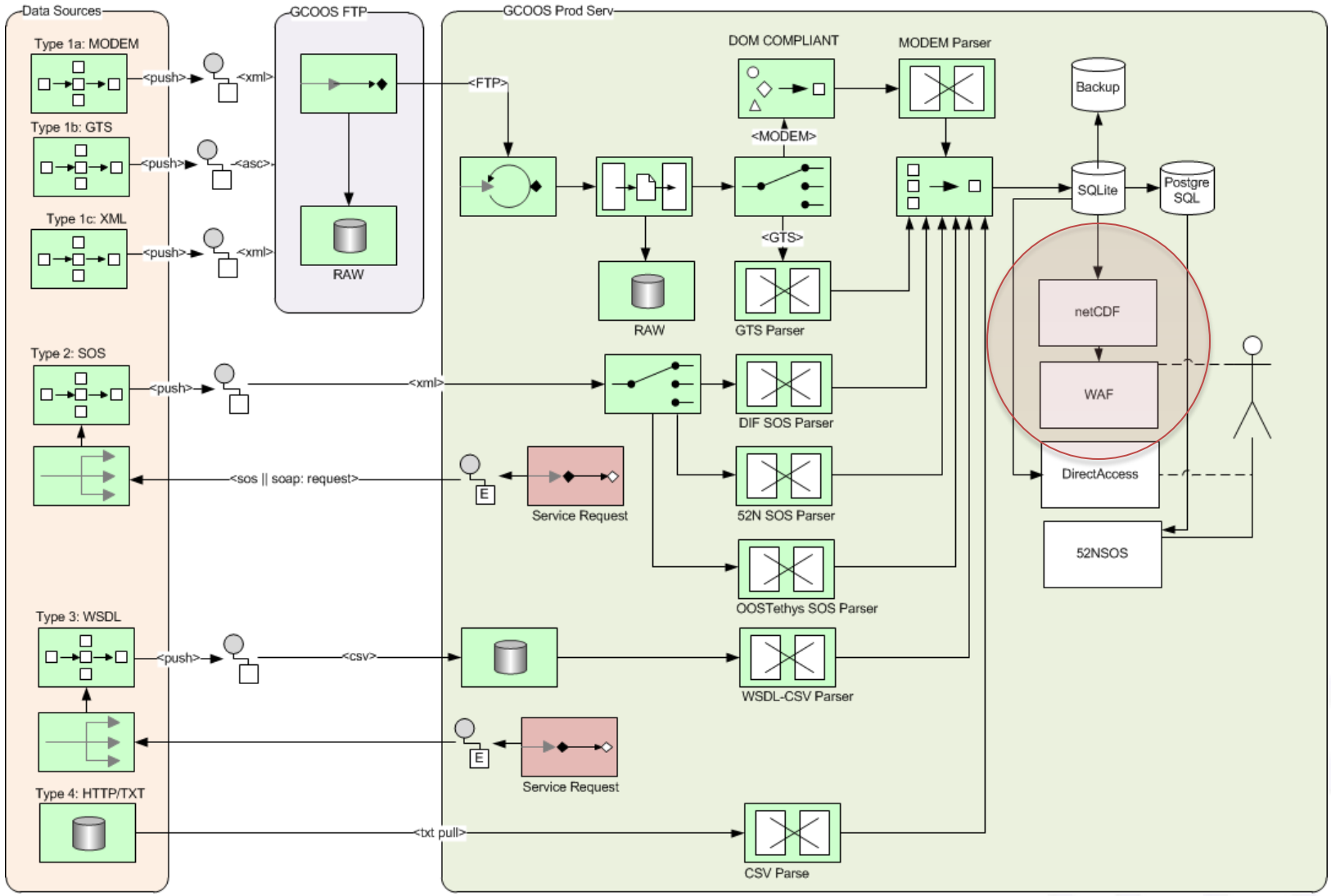

IOOS | EYES ON THE OCEAN

The Process

GULF OF MEXICO COASTAL OCEAN OBSERVING SYSTEM

Preliminaries

- Determine netCDF Format
- NCEI NetCDF Templates v2.0
- GCMD Science Keywords Version 8.1
- Climate and Forecast (CF) Standard Name Table v33
- Attribute Conventions for Dataset Discovery (ACDD)
- Meetings with NCEI (M. Biddle and J. Bosh)

Development and Evaluation

- Open source (https://github.com/GCOOS/csv2nc) Python codes with NCEI contribution
- GCOOS WAF Deployment
- Compliance checker
- Manual evaluation

Documentation

- ATRAC Documentation
- Request to Archive
- ISO Metadata
- Data Submission Agreement

Operational

- CRON (monthly)
- Files uploaded
- Files updated
- SHA384SUM
- NCEI Pull

Challenges and 'Gotchas'

GULF OF MEXICO COASTAL OCEAN OBSERVING SYSTEM

- Keywords based GCMD Science Keywords Version 8.1

  e.g. EARTH SCIENCE>OCEANS>OCEAN CIRCULATION>
  OCEAN CURRENTS,EARTH SCIENCE>TERRESTRIAL HYDROSPHERE>
  WATER QUALITY/WATER CHEMISTRY>CHLOROPHYLL,EARTH SCIENCE>
  OCEANS>OCEAN CHEMISTRY>OXYGEN,EARTH SCIENCE>
  OCEANS>COASTAL PROCESSES>SEA SURFACE HEIGHT,EARTH SCIENCE>
  OCEANS>SEA SURFACE TOPOGRAPHY>
  SEA SURFACE HEIGHT,EARTH SCIENCE>OCEANS>SALINITY/DENSITY>
  SALINITY,EARTH SCIENCE>OCEANS>OCEAN TEMPERATURE>
  WATER TEMPERATURE

- License and absence of Disclaimer
  e.g. Creative Common (CC) 0

- Listing the instruments per platform following GCMD Science Keywords Version 8.1 (http://gcmd.nasa.gov/learn/keyword_list.html)

- URN for asset (platform and sensor) description (http://ioos.github.io/conventions-for-observing-asset-identifiers/ioos_assets_wiki_init_v0_1/)

- Python + netCDF4 + Handling fill values + datetime